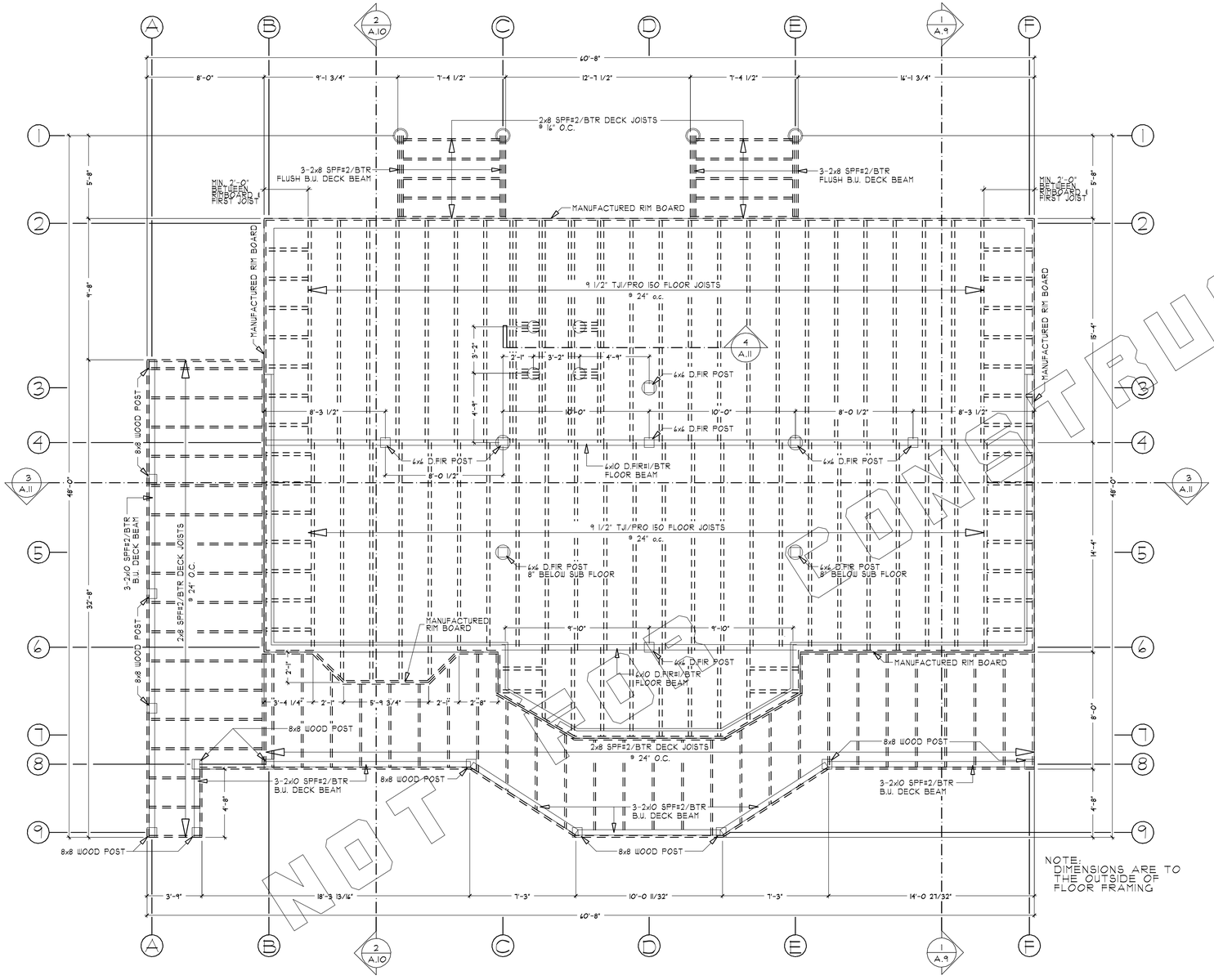

1 A.4 MAIN FLOOR FRAMING
SCALE: 1/4"=1'-0"

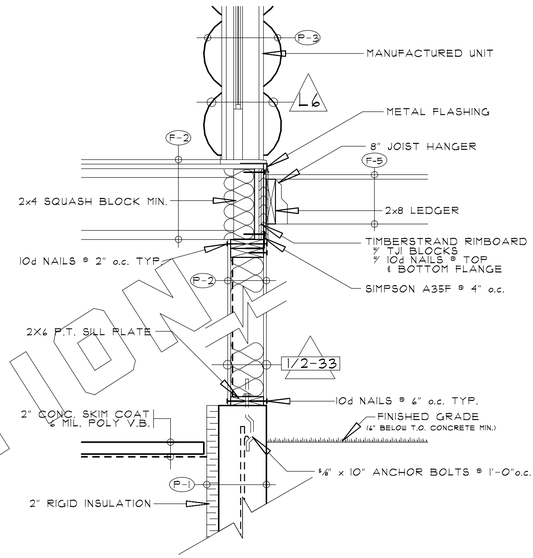

4 A.4 WALL/FLOOR DETAIL
SCALE: 1"=1'-0" SEE SECTION 1/A.9

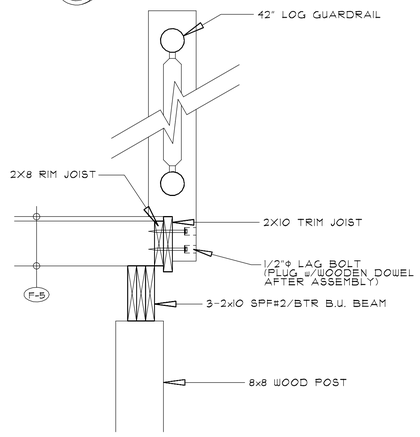

5 A.4 DECK BEAM DETAIL
SCALE: 1"=1'-0" SEE SECTION 1/A.9

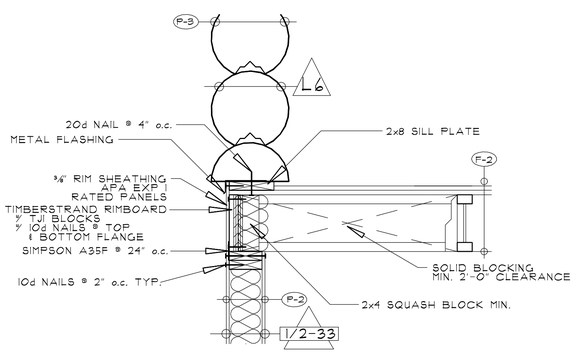

22 A.4 WALL/FLOOR DETAIL
SCALE: 1"=1'-0" SEE SECTION 3/A.11

ISSUED FOR PERMIT

REVISIONS	
1	28 FEB. 2003
2	17 JUNE 2003
3	
4	
5	

The Log Connection
101-208 Ellis St.
Penticton, BC
V2A 4L6
Phone: (250) 770-9031
Toll Free 1-888-207-0210
E-mail: loghome@TheLogConnection.com
www.thelogconnection.com

The Log Connection
Log Home Design Specialist

PAGE TITLE	MAIN JOIST & DETAILS
SCALE	AS NOTED
DATE	NOV. 18 2002
DRAWN BY	ROBERT WOOD
CHECKED BY	

A.4